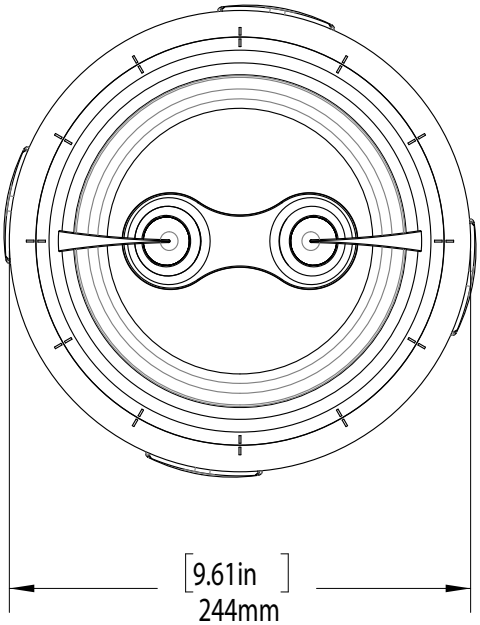

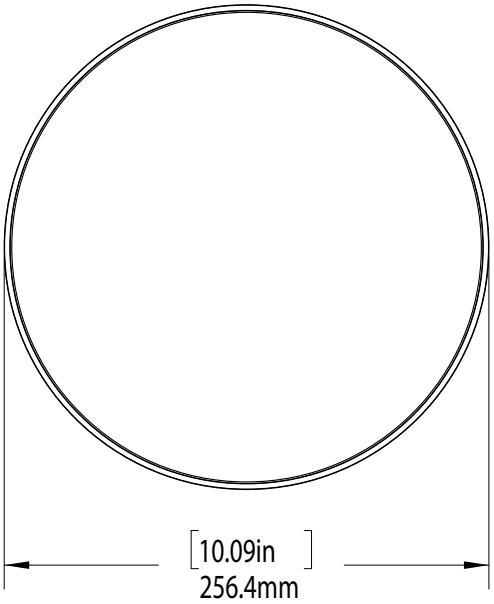

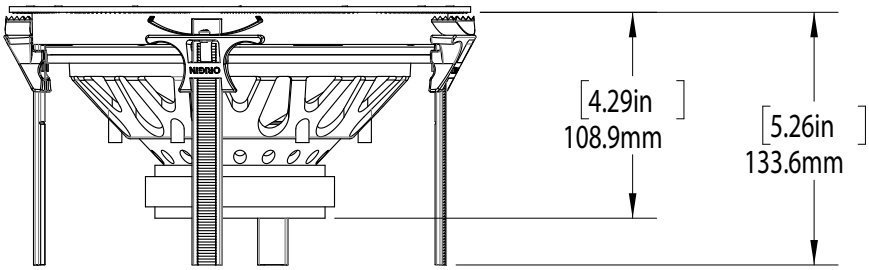

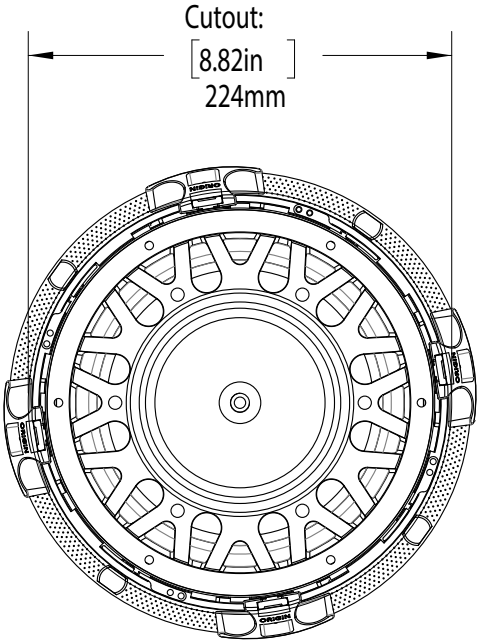

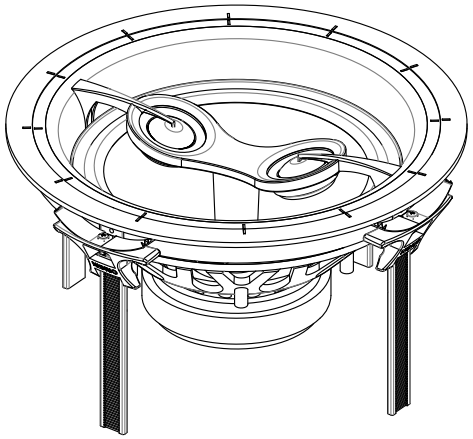

Origin Acoustics
Mission Inn Rotunda
3649 Mission Avenue, 1st Floor
Riverside, CA 92501

844-ORIGIN1 (674-4461)
www.originacoustics.com

BOC82DT

SCALE:1:4