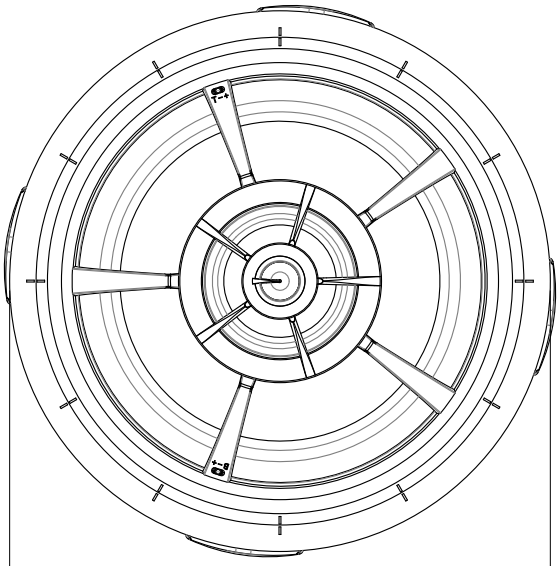

[11.26in]
286mm

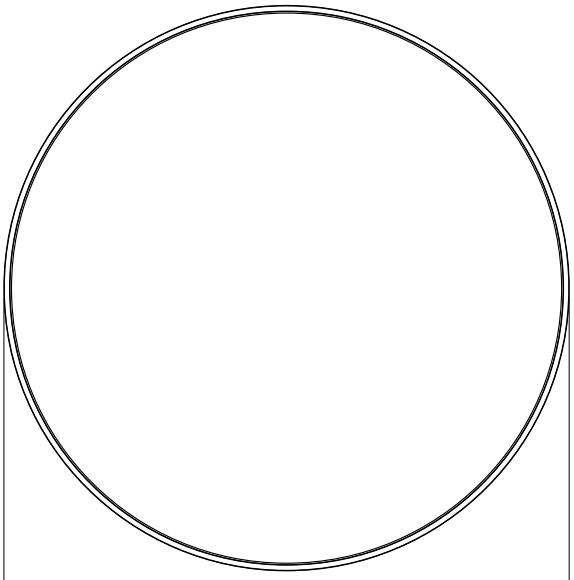

[11.77in]
299mm

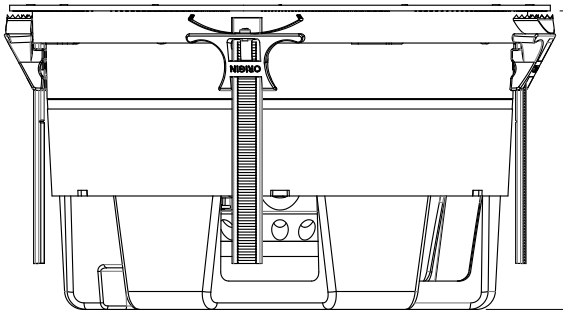

[6.22in]
157.9mm

Cutout:
[10.47in]
266mm

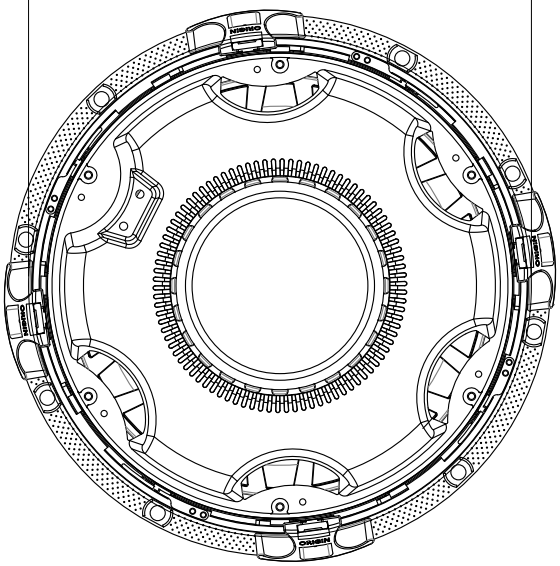

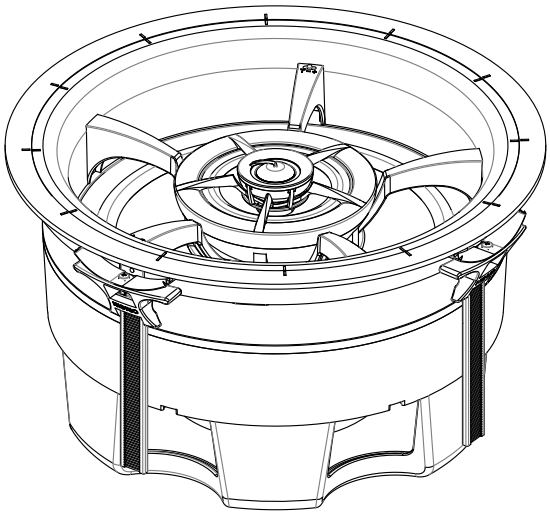

Origin Acoustics
Mission Inn Rotunda
3649 Mission Avenue, 1st Floor
Riverside, CA 92501

844-ORIGIN1 (674-4461)
www.originacoustics.com

BOC106

SCALE:1:4